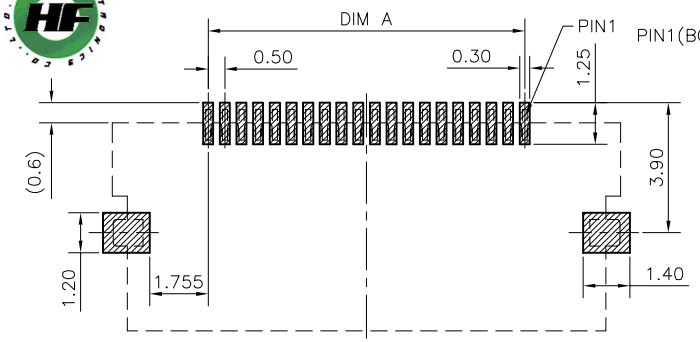

RECOMMENDED PCB LAYOUT(TOP VIEW)
GENERAL TOLERANCE ±0.05

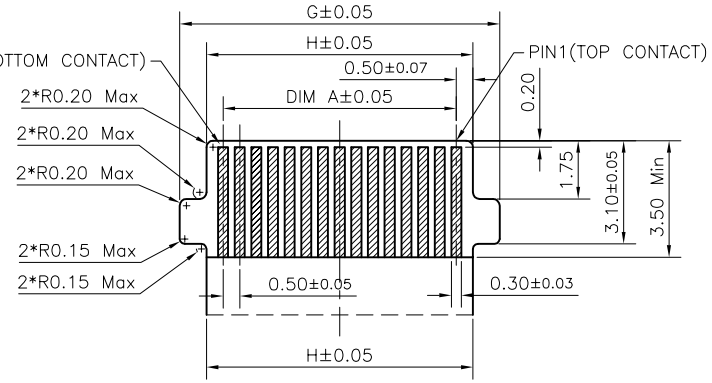

RECOMMENDED FPC/FFC DIMENSIONS
GENERAL TOLERANCE ±0.05
(THICKNESS:0.3±0.03)

NOTES:
1. MATERIAL:
   1.1 HOUSING: THERMOPLASTIC, HIGH TEMP., UL94V-0; COLOR:NATURAL.
   1.2 CONTACT: COPPER ALLOY
   1.3 FITTING NAIL: COPPER ALLOY
   1.4 ACTUATOR : THERMOPLASTIC, HIGH TEMP., UL94 V-0; COLOR:BLACK.
2. FINISH:
   2.1 CONTACT:
   50u" MIN. NICKEL PLATING OVERALL.
   M: 3u" MIN GOLD PLATING ON CONTACT AREA.
   2.2 SOLDER:
   50u" MIN. NICKEL PLATING OVERALL.
   M: GOLD FLASH PLATING ON SOLDER TAIL.
   2.3 FITTING NAIL:
   50u" MIN. NICKEL PLATING OVERALL.
   80u" MIN. MATT TIN ON SOLDER TAIL
3. SPEC. PLS. REFER TO PS-52513-XXXXX-XXX
4. PACKAGE PLS. REFER TO 52513-XXXXX-02-TRP
5. PART NUMBER

52513-XXX X X-XXX
- CKTS
- PACKING — 0: TAPE & REEL
- PLATING — M: 3u" MIN. GOLD PLATING ON CONTACT, GOLD FLASH PLATING ON SOLDER
- 001

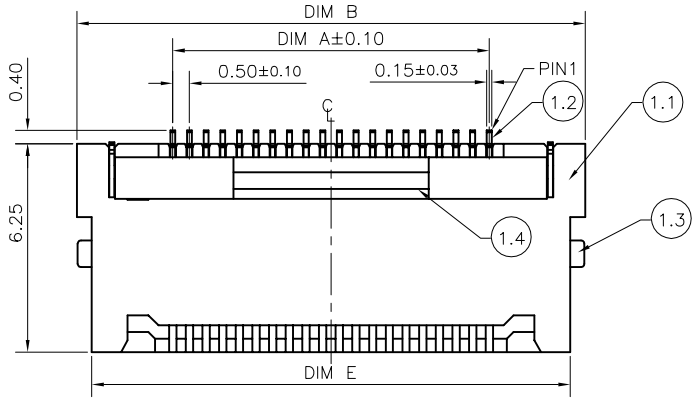

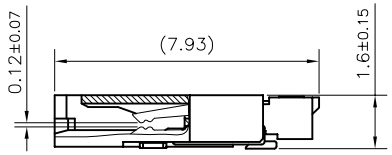

(ACTUATOR CLOSED)

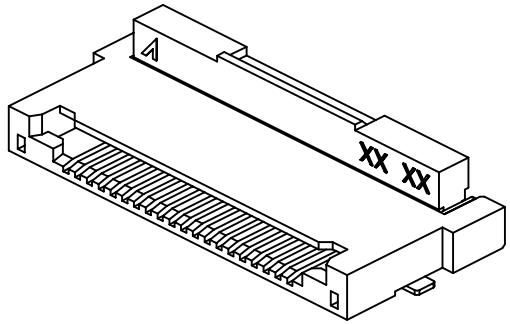

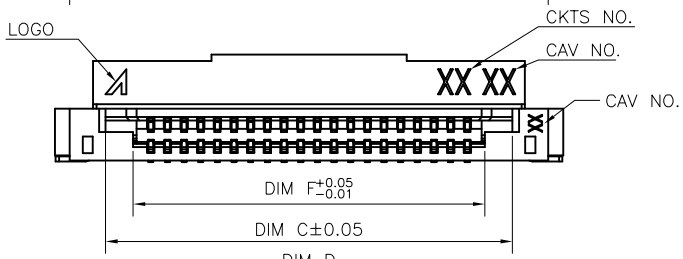

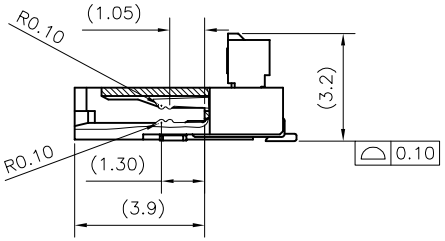

(ACTUATOR OPEN)

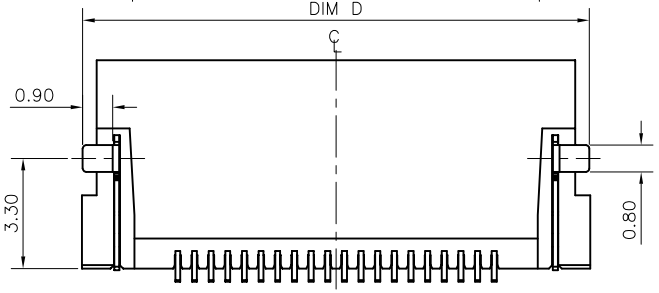

CKT	DIM A	DIMB	DIM C	DIM D	DIM E	DIM F	DIM G	DIM H
20	9.50	15.26	12.21	15.21	14.36	10.56	12.10	10.50

QUALITY SYMBOLS MAJOR Ⓜ CRITICAL Ⓒ	DRAWN BY: Zhu, Wei — DATE: 20'/01/10	ACES ELECTRONICS	
GENERAL TOLERANCES (UNLESS SPECIFIED) X. ±0.5 .X ±0.25 .XX ±0.15 .XXX ±0.1 ANGLES ±2°	CHECKED BY: Xu, Zhi Yong — DATE: 20'/01/10 APPROVED BY: Xu, Zhi Yong — DATE: 20'/01/10	TITLE: 0.5mm PITCH EASY ON FPC SMT R/A D/C TYPE 1.6H	
	UNITS: mm	SIZE: A4	DWG NO.: 52513-XXXXX-XXX
	SCALE: 5 : 1 — SHEET NO.: 1 OF 1	REV: A	PART NO.: SEE NOTES